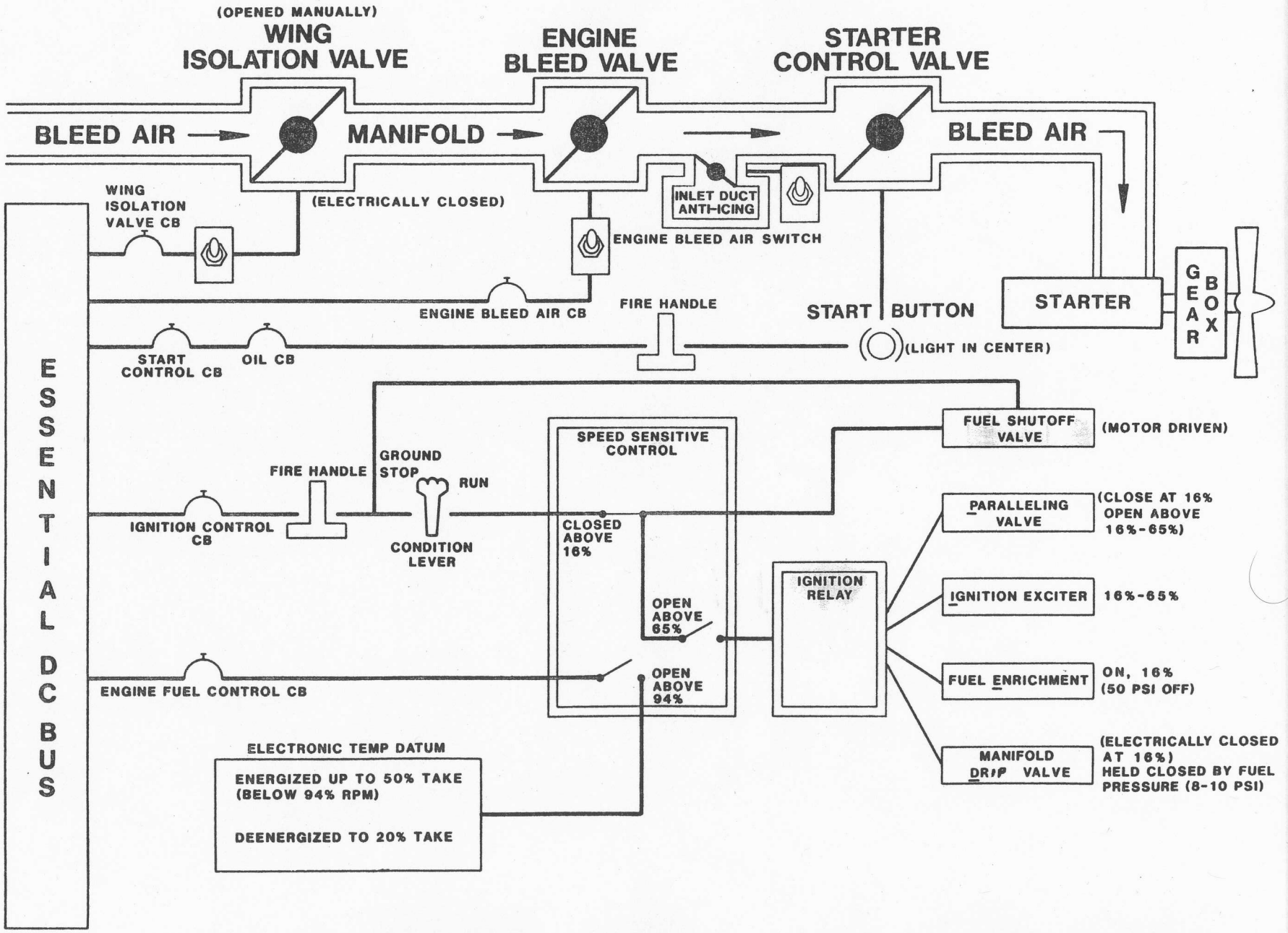
(OPENED MANUALLY)
WING ISOLATION VALVE
ENGINE BLEED VALVE
STARTER CONTROL VALVE
BLEED AIR
MANIFOLD
BLEED AIR
WING ISOLATION VALVE CB
(ELECTRICALLY CLOSED)
INLET DUCT ANTI-ICING
ENGINE BLEED AIR SWITCH
ENGINE BLEED AIR CB
FIRE HANDLE
START BUTTON
(LIGHT IN CENTER)
STARTER
GEAR BOX
START CONTROL CB
OIL CB
ESSENTIAL DC BUS
FUEL SHUTOFF VALVE
(MOTOR DRIVEN)
SPEED SENSITIVE CONTROL
GROUND STOP
RUN
FIRE HANDLE
IGNITION CONTROL CB
CONDITION LEVER
CLOSED ABOVE 16%
OPEN ABOVE 65%
OPEN ABOVE 94%
IGNITION RELAY
PARALLELING VALVE
(CLOSE AT 16% OPEN ABOVE 16%-65%)
IGNITION EXCITER
16%-65%
FUEL ENRICHMENT
ON, 16% (50 PSI OFF)
ENGINE FUEL CONTROL CB
MANIFOLD DRIP VALVE
(ELECTRICALLY CLOSED AT 16%) HELD CLOSED BY FUEL PRESSURE (8-10 PSI)
ELECTRONIC TEMP DATUM
ENERGIZED UP TO 50% TAKE (BELOW 94% RPM)
DEENERGIZED TO 20% TAKE